SAG SEGURIDAD

LOCKS

Model CSI-DB

- Stainless steel cylinder and keys (AISI 303)
- Stainless steel base plate and mechanisms (AISI 304)
- Iron Pin and Zamak housing
- Plates are not included
- CSI-DB: Interior and exterior key opening

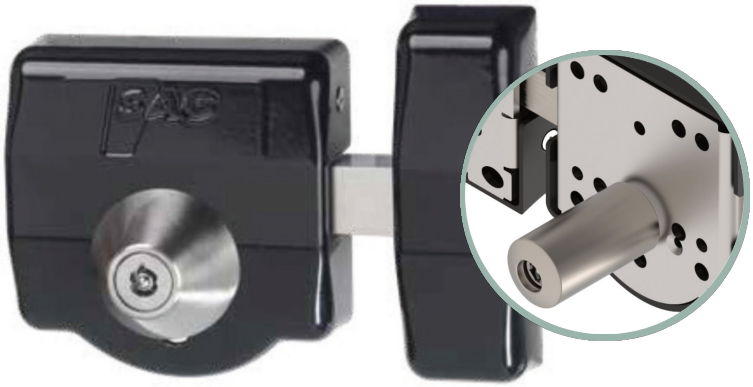

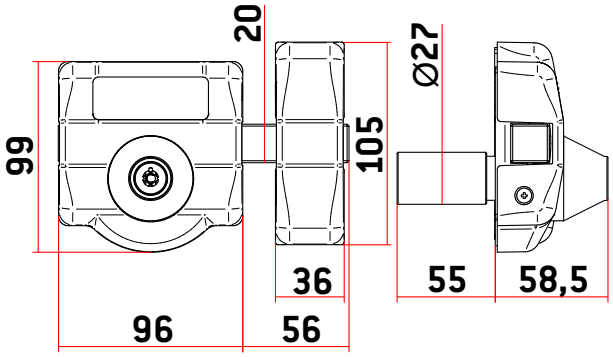

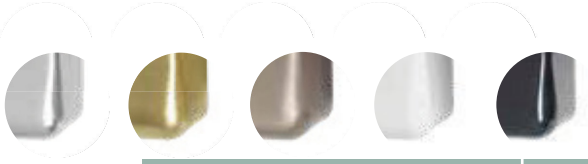

EXTRA PLATE

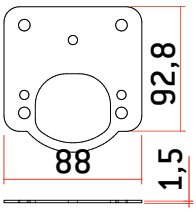

EXTRA LATCH PLATE

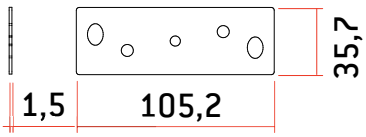

MODEL	CODE	WEIGHT (g)	KEY Mod. TS
Chrome-plated CSI-DB	AACP0041	1.598	3
Brass-plated CSI-DB	AACP0042	1.598	3
Satin Nickel-plated CSI-DB	AACP0052	1.598	3
White CSI-DB	AACP0060	1.598	3
Black CSI-DB	AACP0061	1.598	3
Extra Plate	AACP0111	60	
Extra Latch Plate	AACP0107	43	

* Note: Please contact SAG Seguridad for custom-made pins or cylinder lengths over 55mm, such as 65-75-85-95mm.